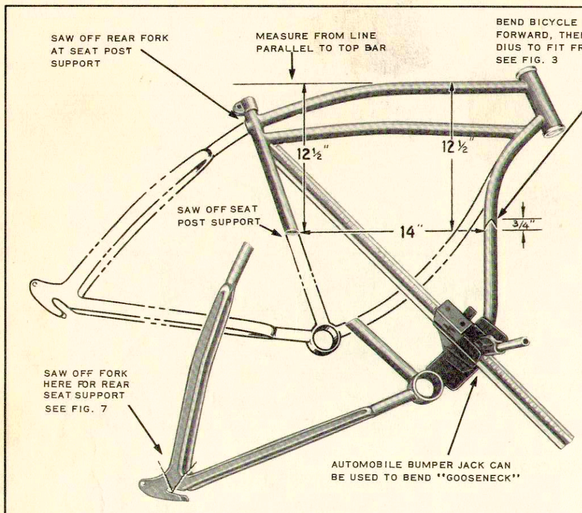

FIG. 1 REWORKING BICYCLE FRAME

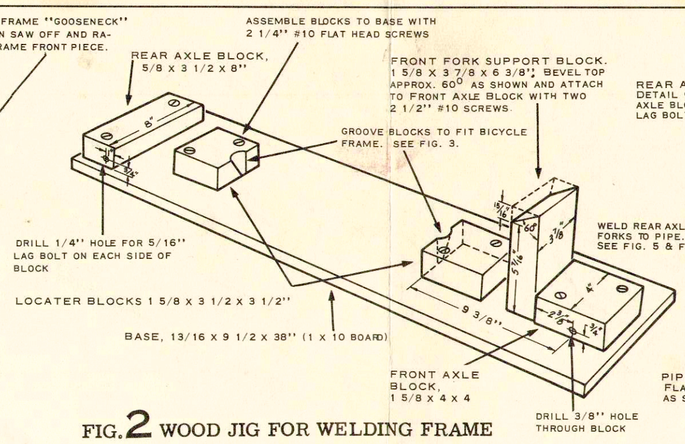

FIG. 2 WOOD JIG FOR WELDING FRAME

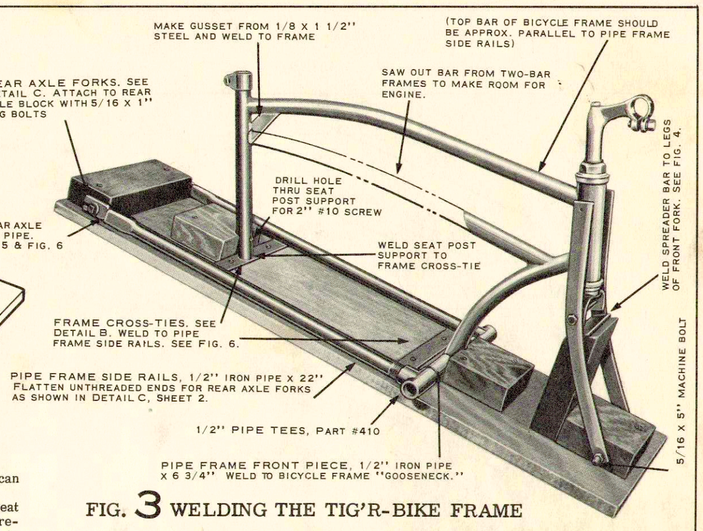

FIG. 3 WELDING THE TIG'R-BIKE FRAME

Read your plans over carefully, studying the Figures (illustrations) as referred to in the step-by-step instructions which follow. Dimensions for construction of detail parts are shown on Plan Sheet No. 2 (reverse side).

STEP #1 SAWING AND REFORMING THE BICYCLE FRAME

The Tig'r-Bike frame is made from a 26" boys bicycle frame as shown in Figures 1 and 3. Junked bicycle frames are easy to find and are usable for the Tig'r-Bike frame in almost any condition. Some shops will sell you a used frame very cheaply. Or you can buy a "junker" and tear it down discarding the unused parts.

Begin by sawing thru the rear fork just behind the seat post. Then saw off the seat post support to the dimension shown in Fig. 1. Frame "gooseneck" must be bent (reformed) to make room for engine. An automobile bumper jack can be used as shown to make bending easier. Bend carefully to avoid flattening tubing; heating with a propane torch will aid bending. After bending to obtain 14" dimension shown, saw off "gooseneck" so that only frame as shown in Figure 3 remains. Don't throw away the discarded section; see Figure 7 for use of rear fork as a support for the "buddy type" seat.

On double bar type frames the lower bar must be sawed out to make room for the engine. Leaving a 4" to 5" stub as shown in Fig. 3 will provide support for a battery case if a headlamp (Part #446) is to be installed.

Spring action front fork can be purchased (Part #413) or made from solid steel forged-type front forks. Cut-off legs of fork and drill as shown in Fig. 4. Assemble legs to fork stub with 5/16" machine bolt as shown, If the spring action feature is not desired, saw off upper portion of legs, weld to fork stub, and omit the bolt.

STEP #2 WOOD WELDING JIG

The simple wood welding jig shown in Fig 2 and Fig 3, although not absolutely necessary, holds together all the components of the frame so that it can be taken to a welding shop completely fitted and assembled ready for welding. Make the base from a 1 x 10" or 2 x 10" straight board. Cut the blocks from a 2 x 6" board. Saw and drill blocks to dimensions shown in Fig. 2.

STEP #3 ASSEMBLING AND WELDING THE TIG'R-BIKE FRAME

You will need three pieces of 1/2" black iron pipe threaded on both ends as follows:

44" --Saw in half for two 22" pipe frame side rails. See Fig. 3

6 3/4" -- For pipe frame front piece. See Fig. 3.

9 3/4" -- Saw in half for two 4-7/8" foot rests. See Fig. 4.

Drill and hacksaw two 1/4" steel Rear Axle Forks as shown in Detail C (Sheet No. 2). Flatten ends of pipe frame side rails and insert axle forks. Screw together tightly, the pipe frame front piece, two 1/2" black Pipe Iron Tees, Part #410, and the two pipe frame side rails as shown in Fig. 3. Position this pipe frame assembly on the wood jig base and attach Rear Axle Block to base as shown in Fig. 3. Fasten axle forks to rear axle block with 5/16" x 1" lag bolts. Make Frame Cross Ties as shown in Detail B, beveling the top corners as required for close fit to pipe. Set the bicycle frame in position shown, trimming and shaping the "gooseneck" as necessary to fit the round contour of pipe frame front piece. Assemble the Front Fork Support Block and Axle Block in the fork and bolt fork to the axle block with a 5/16 x 5" machine bolt and attach to base with screws. Notch Locater Blocks to fit snugly against the bicycle frame and install to base with screws.

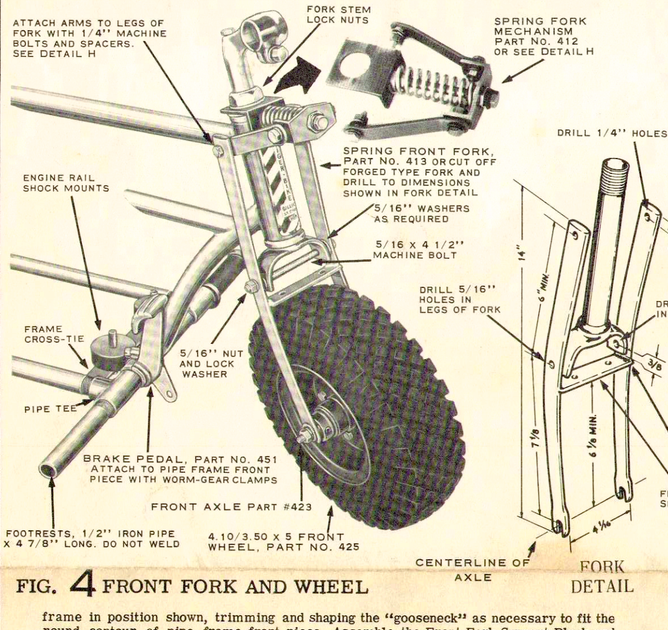

FIG. 4 FRONT FORK AND WHEEL

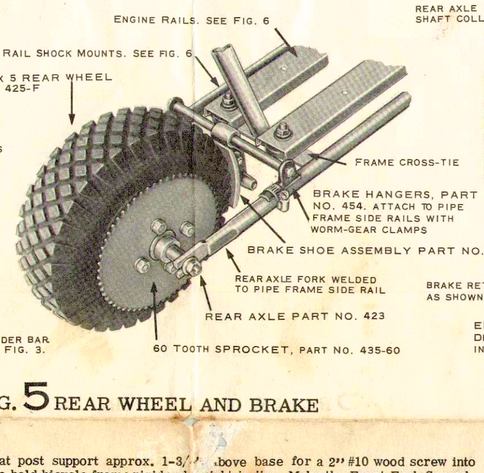

FIG. 5 REAR WHEEL AND BRAKE

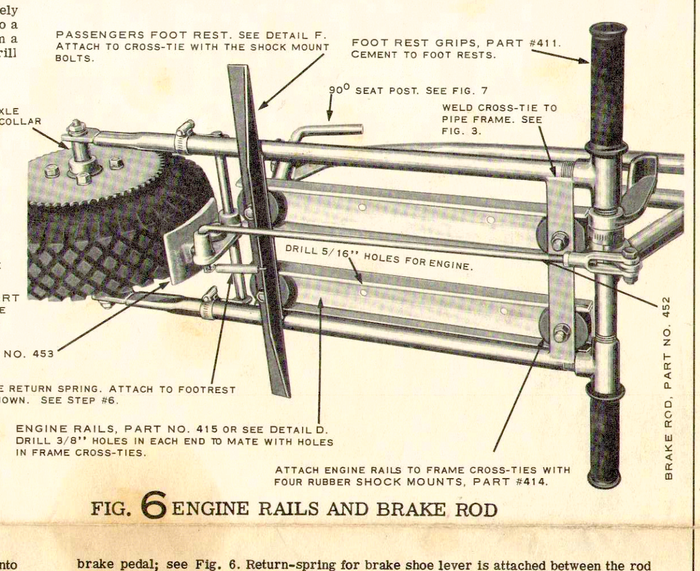

FIG. 6 ENGINE RAILS AND BRAKE ROD

Drill seat post support approx. 1-3/4" above base for a 2" #10 wood screw into locater block to hold bicycle frame rigid and upright in jig. Make the Front Fork Spreader Bar shown in Detail A and wedge between legs of front fork on slanted top of fork support block. For cleaner welds, remove paint from bicycle frame and wire brush pipe, at all welded joints. Either electric or gas welding can be used. Tack weld all joints to hold the frame together, then remove from jig and finish welding. Tack weld threaded pipe to tees to prevent twisting.

Steel gusset can be fitted and welded between top bar and upright as shown in Fig. 3 to increase rigidity of frame.

STEP #4 SPRING FORK MECHANISM INSTALLATION

Installation of spring fork mechanism between legs of front fork and front fork post is shown in Fig. 4. Mechanism can be purchased (Part #412) or fabricated and assembled as shown in Detail H. To install, remove fork stem lock-nut and washer, place fork stem bracket over stem, and replace lock-nut and washer. Then attach arms of mechanism to legs of front fork with 1/4" bolts and spacers as shown in Detail H.

STEP #5 WHEELS AND AXLES INSTALLATION

Pneumatic go-kart wheels recommended are 4.10/3.50 x 5" (11 1/2" diameter) but 4.10/3.50 x 4" could also be used. Rear Wheel, Part #425-T has extended hub and mounting flange for attachment of drive sprocket. Axles, Part #423 for 3/4" ball bearing wheels have ends turned down and threaded to fit axle slots in front and rear forks. 3/4" bore shaft collars position wheels in center of forks. Use grease gun (or pack wheels by hand) with an all-purpose lithium grease.

STEP #6 INSTALLING THE BRAKE

The brake consists of a brake shoe (drag) applied to the tread of the rear tire by an adjustable rod and foot pedal. Attach halves of Brake Pedal, Part #451 with worm-gear clamp so that it rotates on pipe frame cross piece; see Fig. 4. Attach Brake Hangers, Part #454 to pipe frame side rails to support the Brake Shoe Assembly, Part #453; see Fig. 5. Insert Brake Rod, Part #452 in brake shoe lever, and attach adjustable yoke to brake pedal; see Fig. 6. Return-spring for brake shoe lever is attached between the rod and a hole drilled in the passenger foot rest. If foot rest is not used drill a 11/64" hole in the rear cross-tie and install 3/16" x 1" self-tapping screw and nut furnished with the spring. Rotation of worm-gear clam on brake pedal to bear against right engine rail provides adjustable pedal stop; see Fig. 8. Adjust hanger bearings and brake rod clevis so that contour of the brake shoe is not more than 1/8" to 1/4" from tread of tire. Idler Sprocket Part #436 for the chain drive is installed on the shaft of the brake shoe assembly and positioned with shaft collars; see Fig. 7.

STEP #7 INSTALLING ENGINE RAILS AND ENGINE

Engine Rails, Part #415, can be formed by any sheet metal shop from 20 gauge galvanized sheet steel as shown in Detail D. Drill 3/8" hole at each end to mate with holes in frame cross-ties. Attach rails to tie bars with four rubber Shock Mounts, Part #414, see Fig. 6. Excess length of motor mount bolts can be sawed off if desired.

DIMENSIONS SHOWN ARE FOR CLINTON A-500 CLOCKWISE ROTATION ENGINE AS SHOWN IN FIG. 8. IF SOME OTHER ENGINE IS TO BE USED, CHECK ENGINE ON FRAME BEFORE DRILLING AND INSTALLING ENGINE RAILS. Install Clutch, Part #431-12 on engine shaft; see Fig. 8. Position engine temporarily on engine rails and install Chain, Part #435-48. Align engine and idler sprocket so that chain is aligned with rear wheel drive sprocket. Drill engine rails and bolt engine to rails; See Fig 8. Place flat washers between heads of bolts and rails, and lock washers under the nuts. Adjust chain by moving rear axle in slots in axle forks. Chain should be tight, but should not be under a strain. Procedure for installing a counter-clockwise rotation engine as shown in Fig. 9 is the same except clutch and sprockets are installed on the left side and engine rails repositioned as necessary.

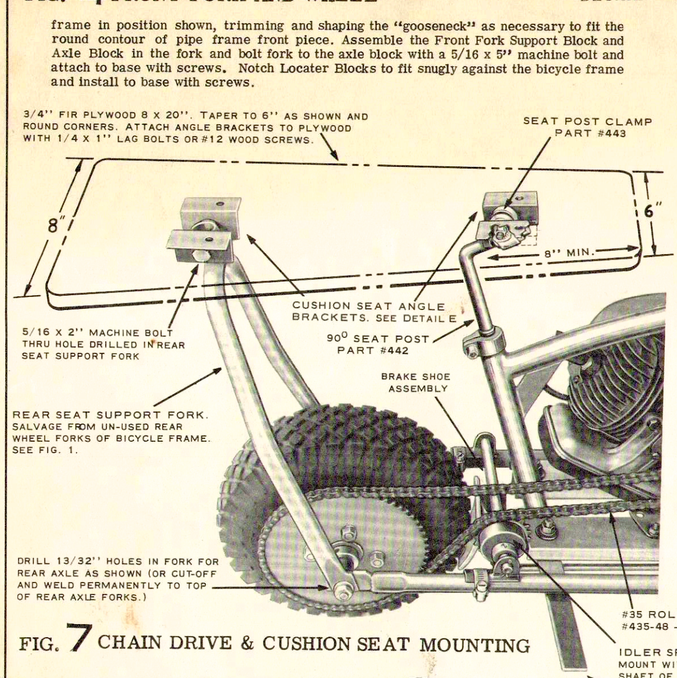

FIG. 7 CHAIN DRIVE & CUSHION SEAT MOUNTING

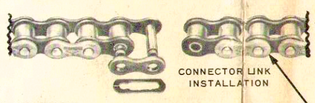

STEP #8 INSTALLING THE THROTTLE CONTROL

Lever type Throttle Control, Part #457 is installed to the handle bars with self-tapping screws; see Fig. 8. Handle cable carefully to avoid kinking internal wire. Attach cable to handle bars and frame "gooseneck" with spring clips and to engine rails with two conduit nuts. Attach to engine throttle lever by making a 90 degree bend in the inner wire.

To install the alternate Twist Grip Throttle Control, Part #428, remove two screws holding halves of chromium housing together and insert inner cable as shown in grip detail of Fig. 8. Re-assemble on handle bar as shown. Outer cable should hold slotted collar in place when clipped to handle bars, but can be cemented to housing if desired.

INSTRUCTIONS CONTINUED ON SECOND SIDE

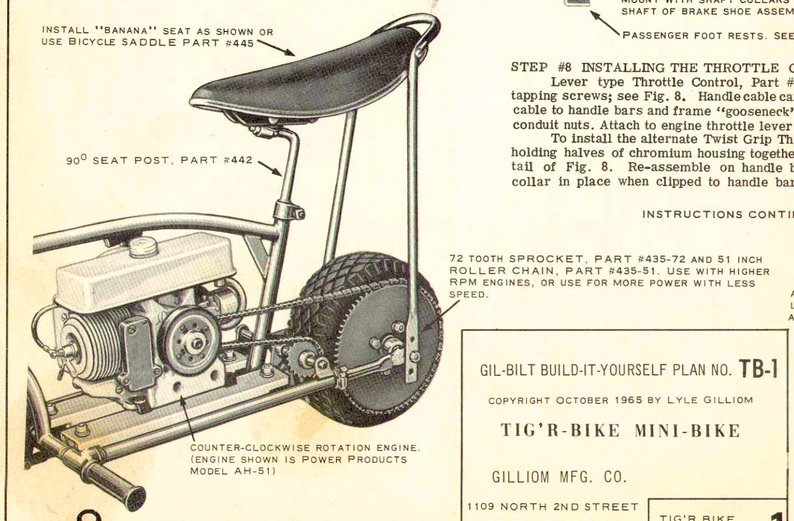

FIG. 9 ALTERNATE SEAT AND DRIVE

GIL-BILT BUILD-IT-YOURSELF PLAN NO. **TB-1**

COPYRIGHT OCTOBER 1965 BY LYLE GILLIOM

TIG'R-BIKE MINI-BIKE

GILLIOM MFG. CO.
1109 NORTH 2ND STREET
ST. CHARLES, MO.

TIG'R BIKE PLAN SHEET NO. 1

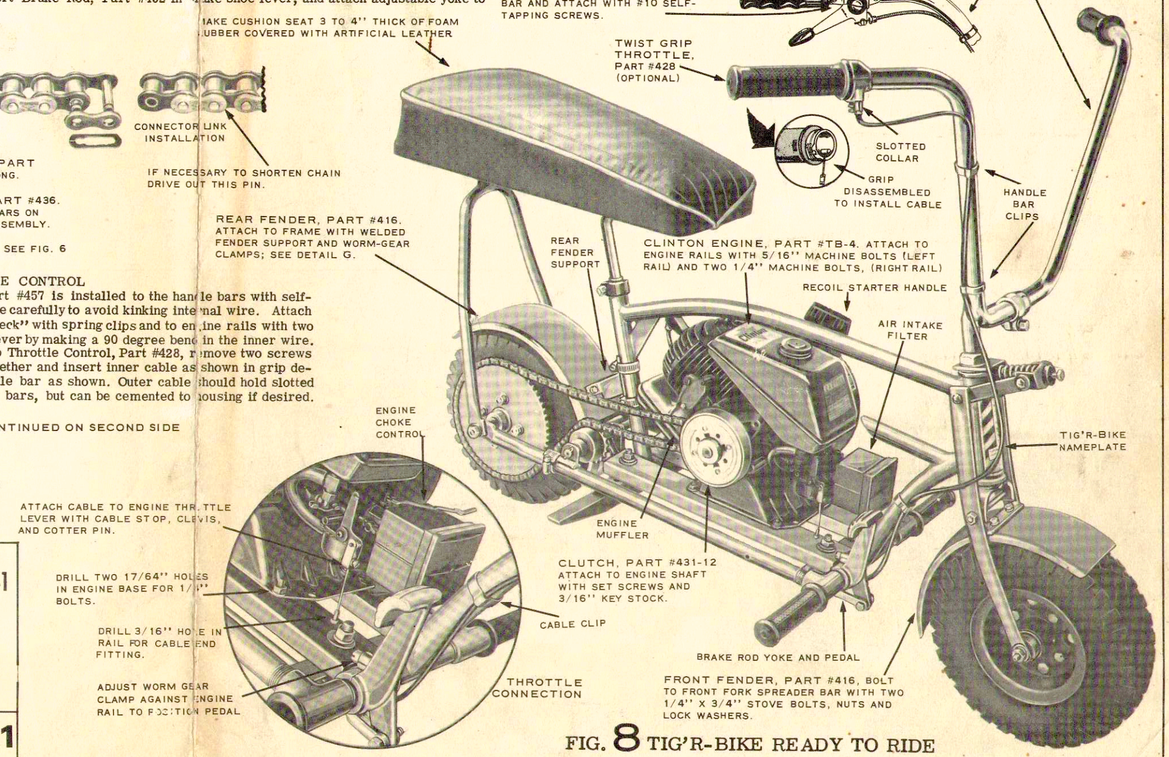

FIG. 8 TIG'R-BIKE READY TO RIDE